VECTORWORKS EDUCATIONAL VERSION

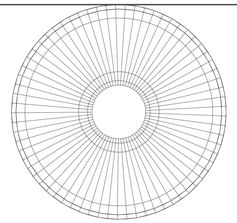

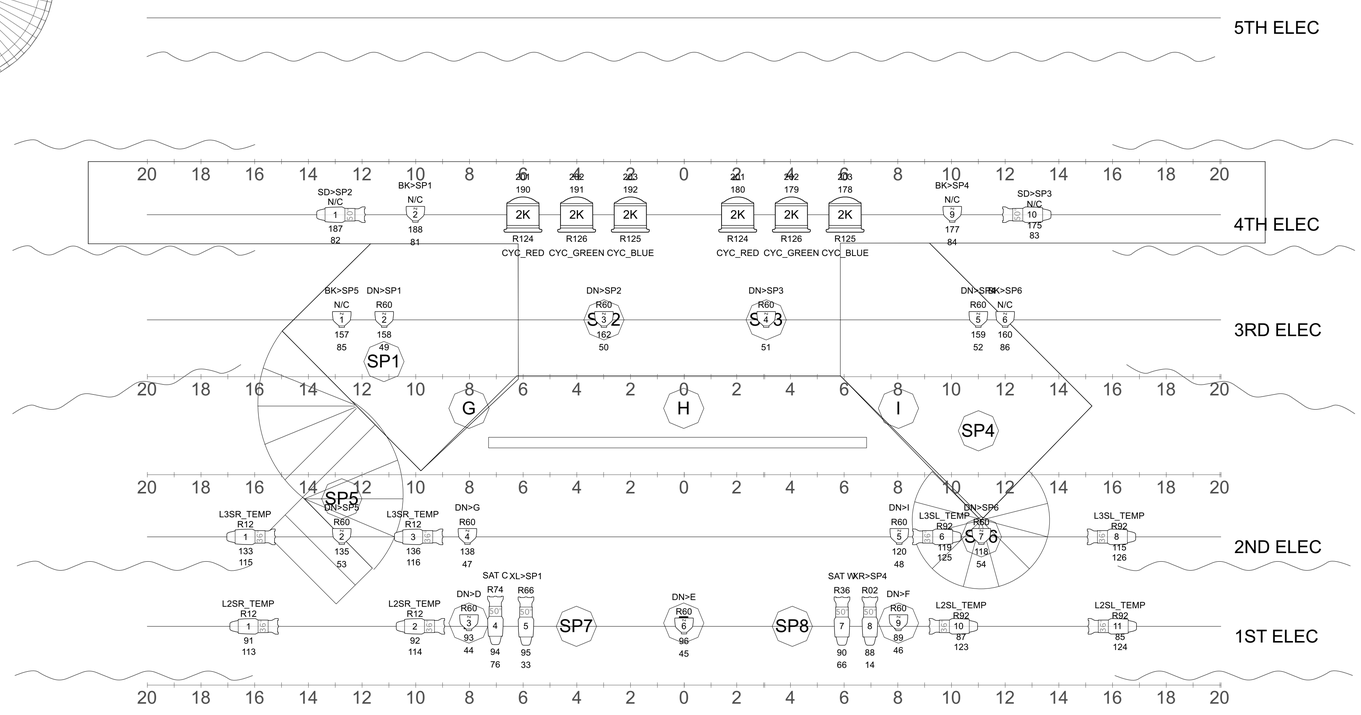

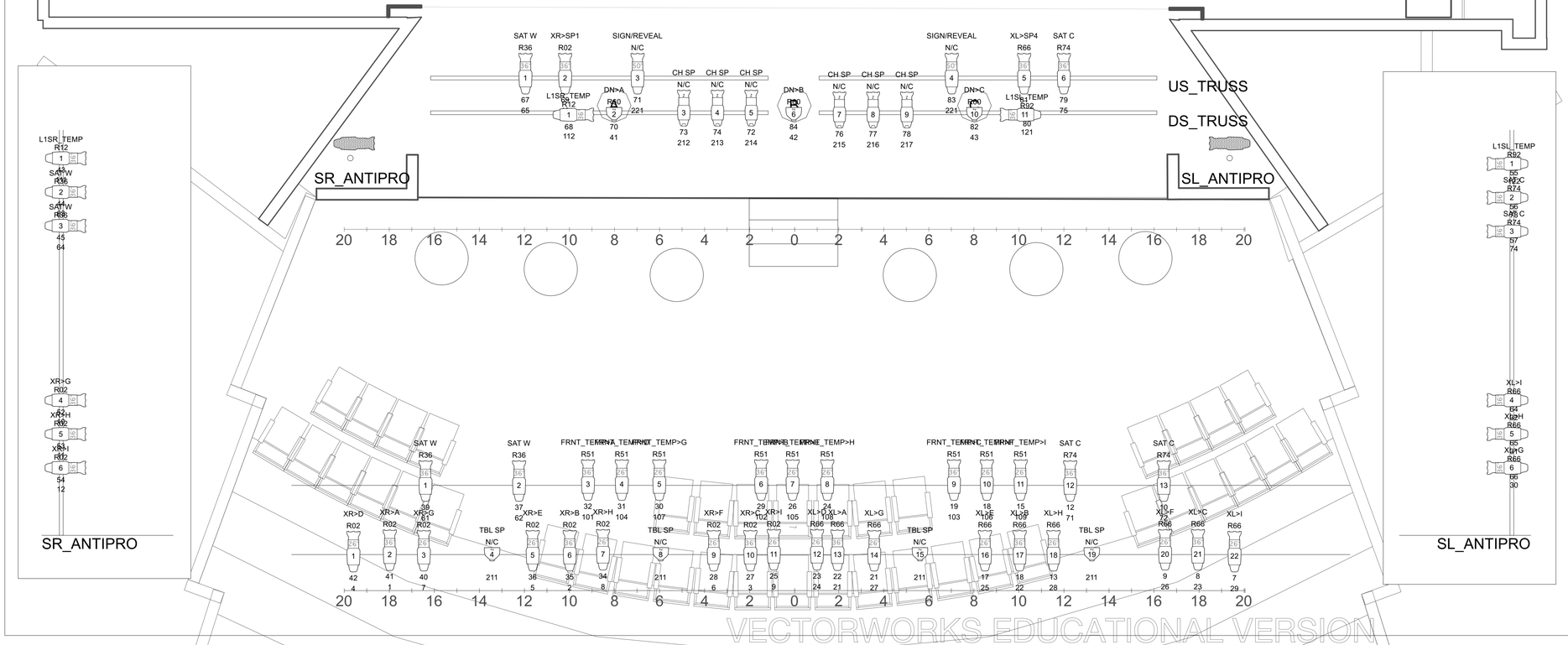

Light

- ETC Source 4 26° @ 575w
- ETC Source-4 36° @ 575w
- ETC Source-4 50° @ 575w
- Altman 2K Fresnel @ 2kw
- ETC Source4 Jr Zoom @ 575w
- ETC Source4 PARNel @ 575/750w

Typical

Color Summary

Color	Size	Count
N/C	6.25"	4
N/C	7.5"	14
R02	6.25"	14
R12	6.25"	6
R36	6.25"	6
R51	6.25"	9
R60	7.5"	14
R66	6.25"	14
R74	6.25"	6
R92	6.25"	6
R124	13in	2
R125	13in	2
R126	13in	2

BUFFALO STATE COLLEGE PRESENTS:

CABARET

LIGHT PLOT

DESIGNER: NICHOLAS QUINN		DRAWING NO. 1 OF 1
DIRECTOR: JENNIFER TOOHEY	SCALE: 3/8" = 1'	
DRAWN BY: NWQ	DATE: 04/04/2018	

VECTORWORKS EDUCATIONAL VERSION